SECTION 7
SYSTEMS DESCRIPTION

TABLE OF CONTENTS

	Page
INTRODUCTION	7–1
HELICOPTER DECRIPTION	7–1
PRINCIPAL DIMENSIONS	7–2
INSTRUMENT PANEL AND CONSOLE	7–3
POWER PLANT	7–8
ENGINE OIL SYSTEM	7–10
FUEL SYSTEM	7–12
FLIGHT CONTROL SYSTEMS	7–14
HYDRAULIC SYSTEM	7–18
N.1 HYDRAULIC SYSTEM	7–18
N.2 HYDRAULIC SYSTEM	7–18
UTILITY HYDRAULIC SYSTEM	7–18
ELECTRICAL SYSTEMS	7–21
DC ELECTRICAL SYSTEM	7–21
AC ELECTRICAL POWER	7–22
HELIPILOT/FLIGHT DIRECTOR OPERATING PROCEDURES	7–26
HELIPILOT IFR OPERATION	7–26
HELIPILOT VFR OPERATION	7–27
FLIGHT DIRECTOR COMPUTER	7–28
IN FLIGHT OPERATION	7–29
VOR	7–30
BC (BACK COURSE) LOC	7–31
AUTO LEVEL (IF RADAR ALTIMETER IS INSTALLED)	7–31
G/A - GO-AROUND	7–31
INTEGRATED DISPLAY SYSTEM (IDS)	7–33
DATA DISPLAY	7–33
DISPLAY DIMMING	7–40
COMPARISION MONITORING OF ECU AND DAU DATA	7–40
MASTER WARNING AND MASTER CAUTION LIGHTS INTERFACE	7–41

FOR TRAINING ONLY

Table of Contents (Cont.d)

	Page
AURAL WARNING GENERATOR (AWG) INTERFACE.	7–41
FUEL SYSTEM INTERFACE.	7–41
ENGINE FIRE DETECTOR INTERFACE.	7–42
WEIGHT ON WHEELS (WOW) INTERFACE.	7–42
ENGINE BLEED AIR VALVE CONTROL.	7–42
BUILT-IN TEST (BIT)	7–43
IFR INSTALLATION	7–44
LIGHTING SYSTEMS	7–47
EMERGENCY EQUIPMENT	7–47
PORTABLE FIRE EXTINGUISHER	7–47
FIRST AID KIT	7–47
COCKPIT VOICE DATA RECORDER	7–47

LIST OF ILLUSTRATIONS

	Page
Figure 7-1. Airframe principal dimensions	7–2
Figure 7-2. Main internal dimensions and volumes.	7–3
Figure 7-4. Front console (typical)	7–5
Figure 7-5. Central console (typical)	7–6
Figure 7-6. Overhead console (typical).	7–7
Figure 7-7. Pratt & Whitney Canada 206C engine	7–9
Figure 7-8. Engine oil supply system schematic.	7–11
Figure 7-9. Airframe fuel system schematic	7–13
Figure 7-10. Flight control systems.	7–15
Figure 7-11. Grip assembly, collective (typical).	7–16
Figure 7-12. Grip assembly, cyclic (typical).	7–17
Figure 7-13. Hydraulic systems.	7–20
Figure 7-14. Electrical power systems.	7–23
Figure 7-15. DC electrical system block diagram.	7–24
Figure 7-16. AC electrical system block diagram.	7–25
Figure 7-17. Cockpit Voice Data Recorder Model FA23XX MADRAS.	7–48
Figure 7-18. Cockpit Voice Data Recorder Control Panel.	7–49

FOR TRAINING ONLY

LIST OF TABLES

	Page
Table 7-1 (sheet 1 of 2). IFR installation components ″COLLINS configuration″	7-45
Table 7-1 (sheet 2 of 2). IFR installation components ″KING configuration″	7-46

FOR TRAINING ONLY

FOR TRAINING ONLY

SECTION 7
SYSTEMS DESCRIPTION

INTRODUCTION

This section provides a general description of systems of A109E helicopter .

HELICOPTER DECRIPTION

The A109E is a high-speed, high-performance, multi-purpose helicopter powered by two Pratt & Whitney Canada PW206C engines, with four-bladed fully articulated main rotor, two-bladed tail rotor and a retractable tricycle-type landing gear.
The airframe consists of two major assemblies: the forward fuselage and the aft fuselage (tail boom).
The forward fuselage comprises the nose section, the cabin and the rear section. The nose section includes an upper compartment for the electrical and electronic equipment, and a lower compartment which accommodates the hydraulic system accumulators, the nose landing gear and the other hydraulic components.
The cabin includes the crew compartment (cockpit) and the passenger compartment. Seating is provided for the pilot (right side) and a passenger (or copilot) in the cockpit, and up to six passengers in the relevant compartment.
The rear section accommodates the fuel tanks, the main landing gear compartments, the baggage compartment and the electrical and electronic equipment compartment.
The upper deck, located above and aft of the cabin area, accommodates the hydraulic system reservoirs and filter goups, the main transmission, the oil coolers and the engines.
The tail boom is bolted to the forward fuselage and supports the tail rotor and the relevant drive system. The tail boom includes the elevators, the vertical upper and lower fins, the tail skid and the tail cone.

FOR TRAINING ONLY

PRINCIPAL DIMENSIONS

Refer to figure 7-1 for the airframe principal dimensions and to figure 7-2 for main internal dimensions and volumes.

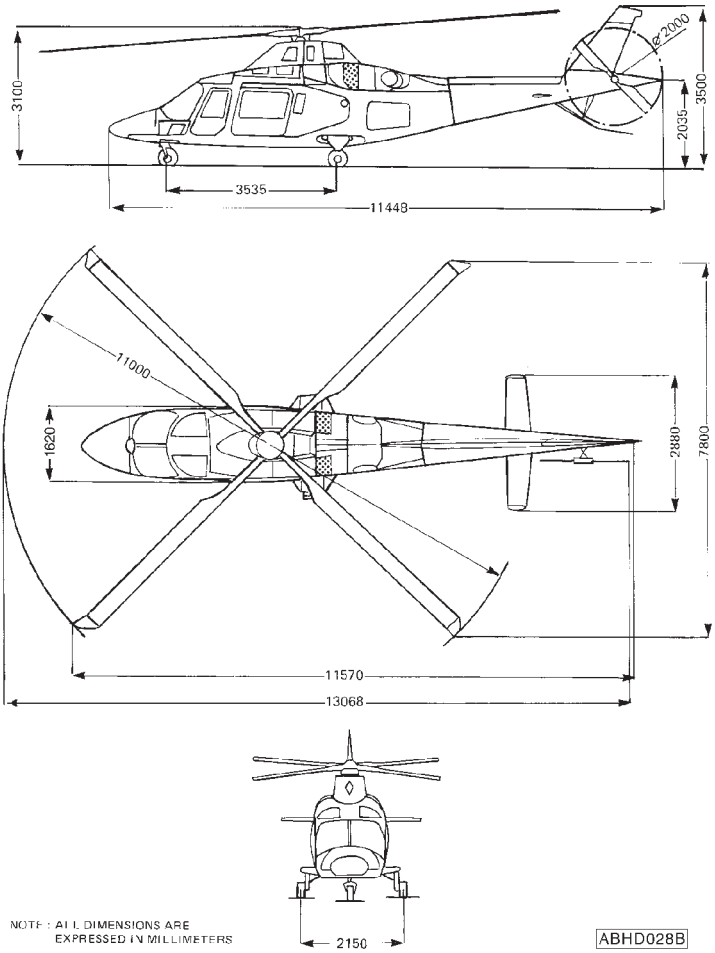

Figure 7-1. Airframe principal dimensions

FOR TRAINING ONLY

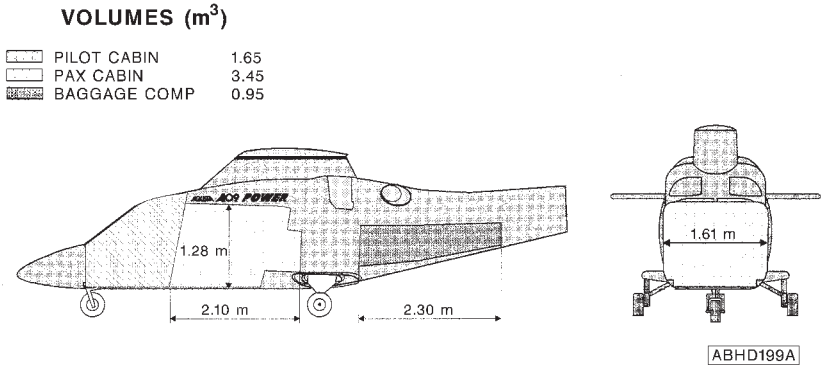

Figure 7-2. Main internal dimensions and volumes.

INSTRUMENT PANEL AND CONSOLE

Refer to figure 7-3 for instrument panel lay-out, to figure 7-4 for front console, to figure 7-5 for central console and to figure 7-6 for overhead panel.

FOR TRAINING ONLY

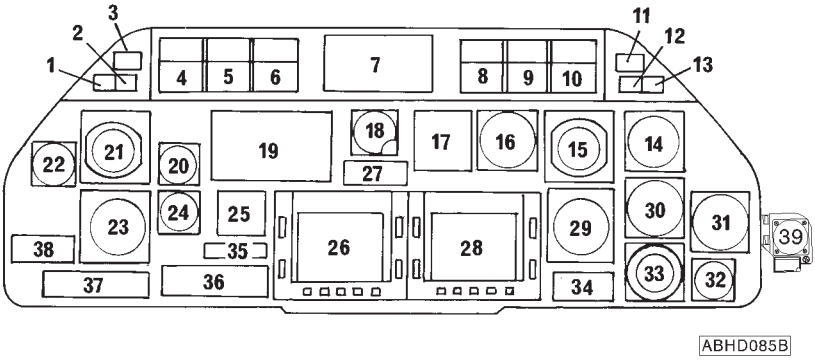

1. MASTER CAUTION lighted push-button
2. MASTER WARNING lighted push-button
3. Marker Beacon indicator
4. A.D.F. control panel
5. NAV2 control panel (VOR2)
6. NAV1 control panel (VOR1)
7. Empty
8. Transponder control panel
9. VHF/AM2 control panel
10. VHF/AM1 control panel
11. Marker Beacon indicator
12. MASTER CAUTION lighted push--button
13. MASTER WARNING lighted push--button
14. Altimeter, encoder
15. Attitude Director Indicator
16. Airspeed indicator
17. Flight Director mode selector
18. Attitude Director Indicator, stand-by
19. Empty
20. Altimeter
21. Attitude Director Indicator
22. Airspeed indicator
23. E.H.S.I.
24. Instantaneous vertical speed (I.V.S.I.)
25. Empty
26. E.C.U.2
27. D.M.E. indicator
28. E.C.U.1
29. E.H.S.I.
30. Instantaneous vertical speed (I.V.S.I.)
31. Radio altimeter indicator
32. Clock
33. Horizontal Situation Indicator
34. Empty
35. Marker Beacon control panel
36. Intercommunication control panel
37. E.H.S.I. control panel
38. Empty
39. Magnetic compass

Figure 7-3. Instrument panel lay-out (typical).

FOR TRAINING ONLY

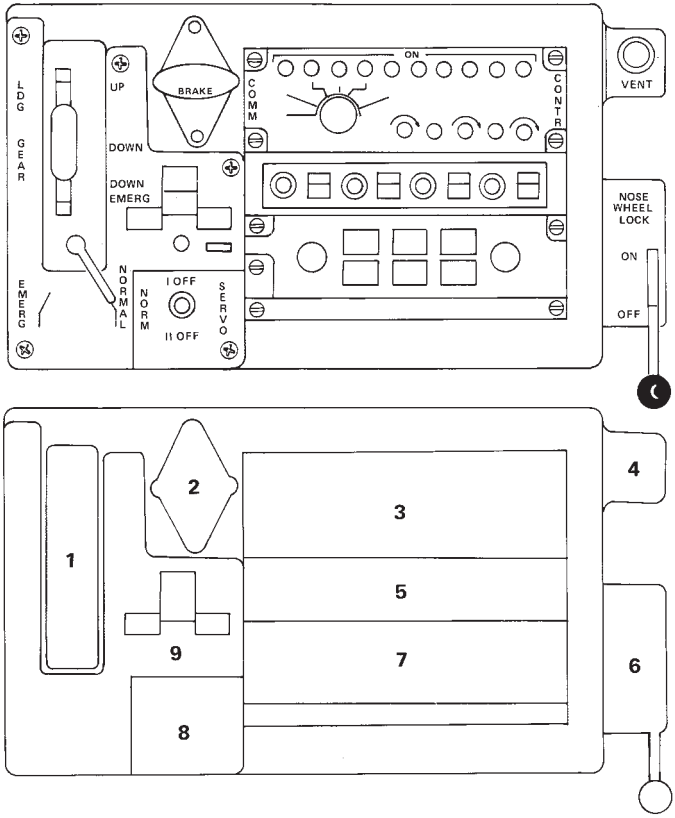

1. Landing gear selector
2. Parking brake handle
3. Intercommunication control panel
4. Cabin ventilation knob
5. ICS selector control panel
6. Nose wheel lock lever
7. EHSI control panel
8. Hydraulic system switch
9. Landing gear position indicator

Figure 7-4. Front console (typical)

FOR TRAINING ONLY

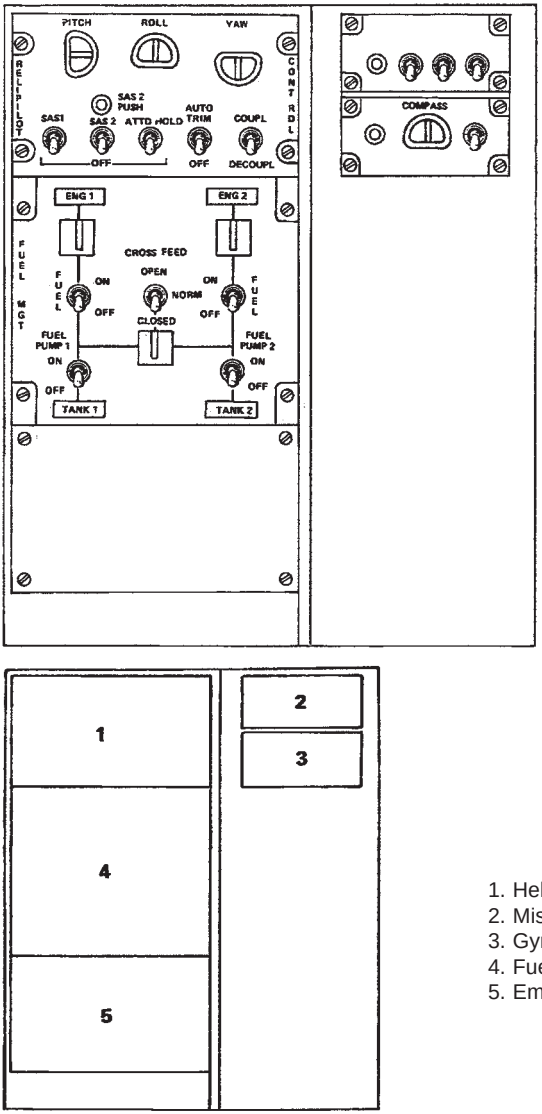

1. Helipilot control panel
2. Miscellaneous panel
3. Gyrocompass control panel
4. Fuel management control panel
5. Empty

ABHDO87A

Figure 7-5. Central console (typical)

FOR TRAINING ONLY

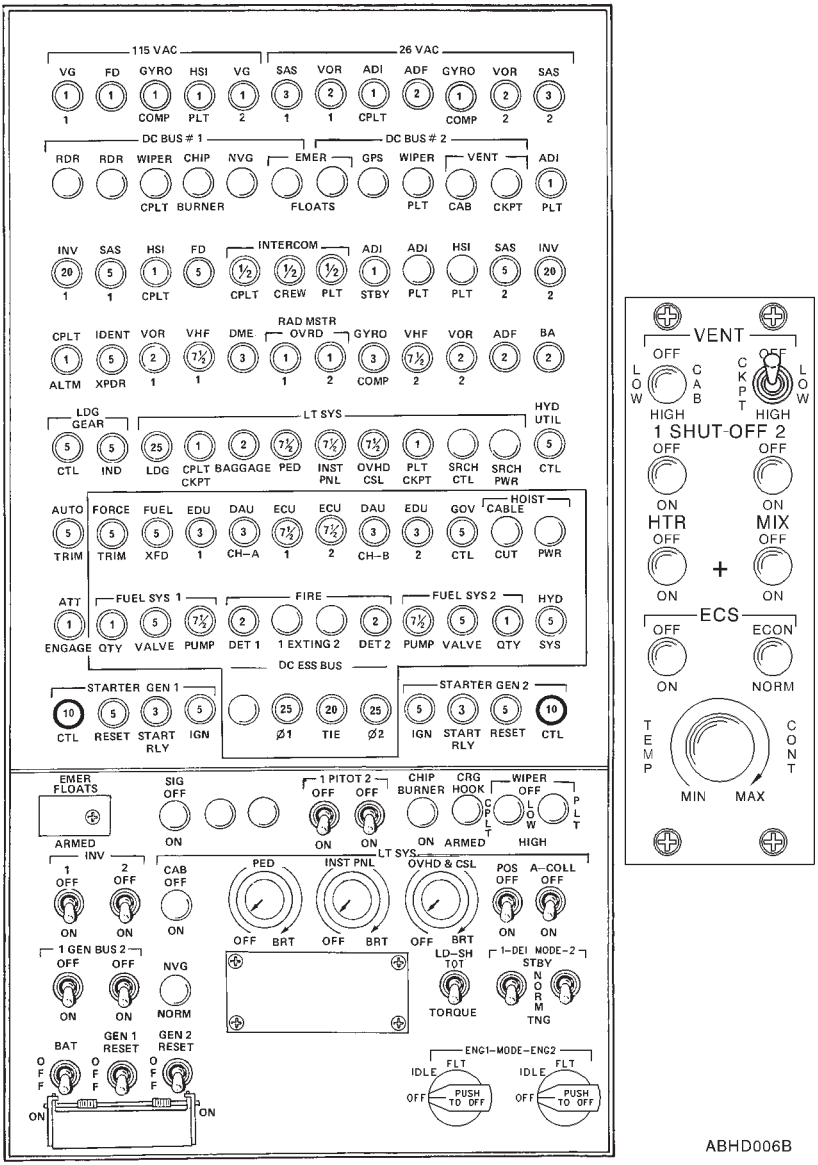

Figure 7-6. Overhead console (typical).

FOR TRAINING ONLY

POWER PLANT

The A109E is powered by two Pratt & Whithey Canada PW206C engines (figure 7-7).

The PW206C engine is a lightweight, free turbine, turboshaft engine incorporating a single-stage centrifugal compressor driven by a single stage compressor turbine. Metered fuel is sprayed into e reservoir flow annular combustion chamber through twelve (12) individual fuel nozzles mounted around the gas generator case. A single channel, Fully Authority Digital Electronic Control (FADEC) with a mechanical backup (FMM ″FUEL MANAGEMENT MODULE″) ensures accurate control of the engine output speed and fast response changes in power demand.

The PW206C cosists of two modules:

- Turbomachinery module
- Reduction gearbox module

The turbomachinery module comprises the cold section and the hot section, while the reduction gearbox provides to reduce power turbine speed to one suitable for rotorcraft transmission operation.

FOR TRAINING ONLY

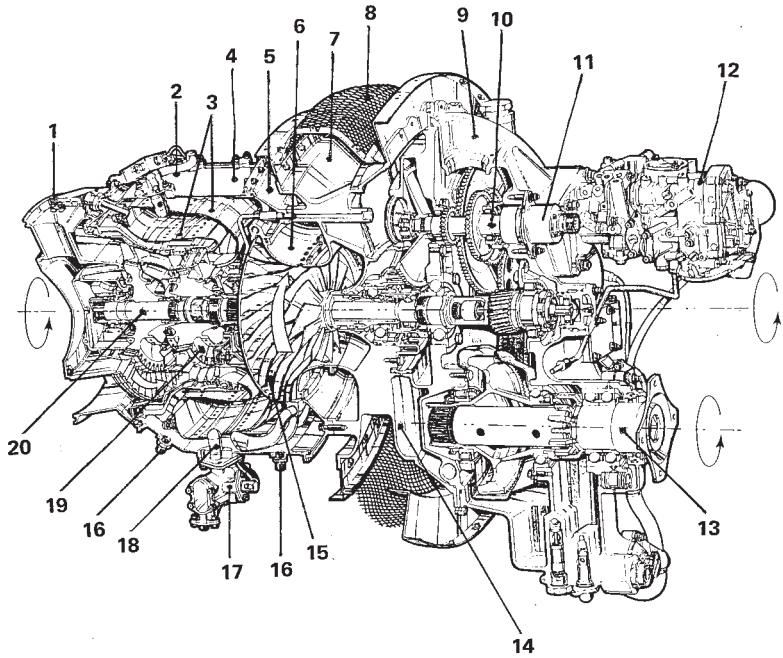

ABHD213A

1. Exhaust case
2. Fuel manifold
3. Combustion chambers
4. Gas generator case
5. Diffuser case
6. Impeller housing
7. Compressor inlet case
8. Air inlet screen
9. Reduction gearbox module
10. Input shaft
11. Permanent magnet alternator
12. Fuel Management Module
13. Output shaft
14. Oil tank cavity
15. Centrifugal impeller
16. Fuel drain valve
17. Fuel flow divider
18. Fuel nozzle
19. Compressor turbine
20. Power turbine shaft

Figure 7-7. Pratt & Whitney Canada 206C engine

FOR TRAINING ONLY

ENGINE OIL SYSTEM

The engine oil system is subdivided into two independent circuits, each connected to the respective engine.
The engine oil system is of the dry-sump type and is supplied from an engine internal tank (one for each engine). Lubrication of different engine components is assured by a pump assembly, composed of a pressure pump and two scavenge pumps, driven by the accessory gearbox, and a pressure circuit filter.
An electrical signal supplies by N.1 or N.2 FADEC (ECC) to DAU which sends signal to EDU1 that displays # 1 OIL PRES and # 2 OIL PRES caution legends.
Two magnetic chip detectors, one located in the bottom of the accessory gearbox, the other in the scavenge pumps outlet, are electrically connected with EEC and DAU which sends signal to EDU1 that displays # 1 OIL CHIPS and # 2 OIL CHIPS caution legends.
The operation of the oil system is fully automatic and therefore no action is required from the pilot except for monitoring the system through EDUs display.
The oil system schematic is illustrated in figure 7-8.

FOR TRAINING ONLY

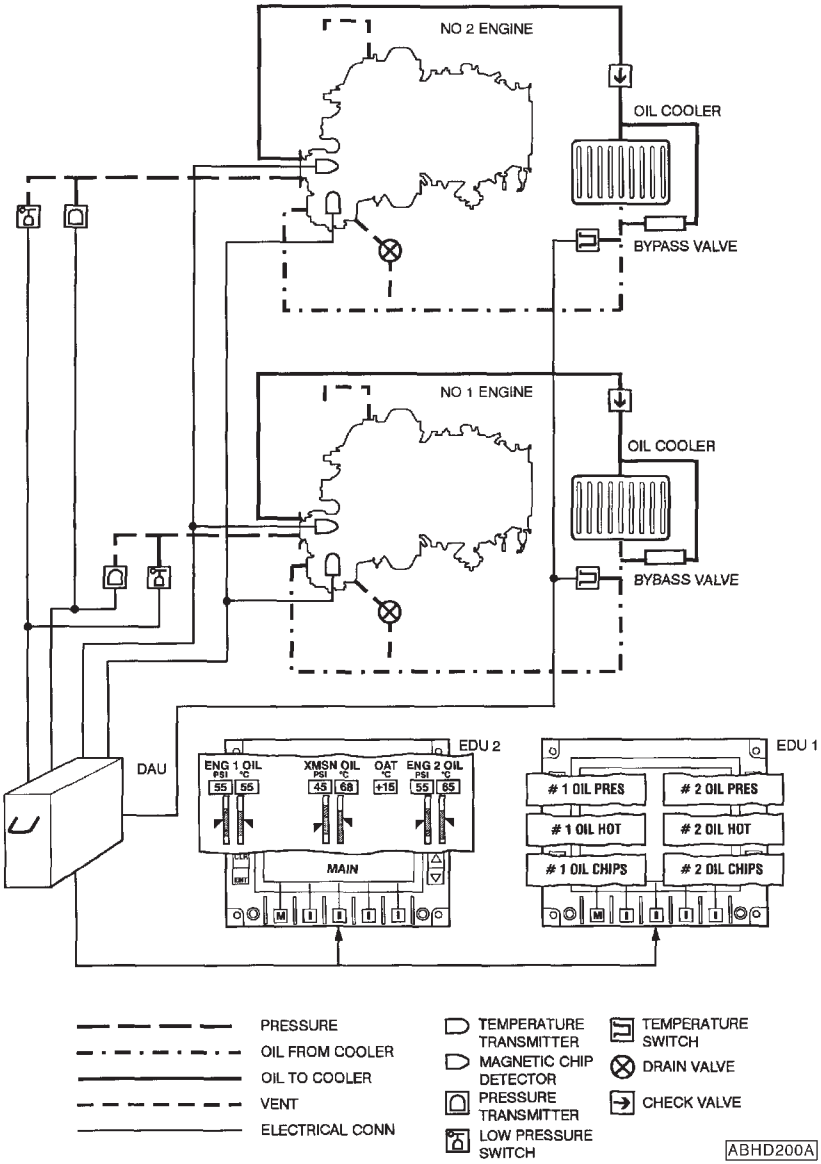

Figure 7-8. Engine oil supply system schematic.

FOR TRAINING ONLY

FUEL SYSTEM

The fuel system (figure 7-9) consists of the following sub-systems:
- the storage system
- the distribution system
- the indication system

The storage system consists of two main tanks and one main rear tank. Each forward tank supplies fuel to the associated engine.
The distribution system consists of two identical independent circuits, each connected to associated engine. Each circuit comprises one fuel pump, a filter assembly, a shut off valve, a pressure transmitter and a differential pressure switch. A crossfeed valve allows the fuel to supply both engines from only one tank. The indicating system comprises the pressure indicating and fuel quantity indicating system and the fuel caution circuit.

FOR TRAINING ONLY

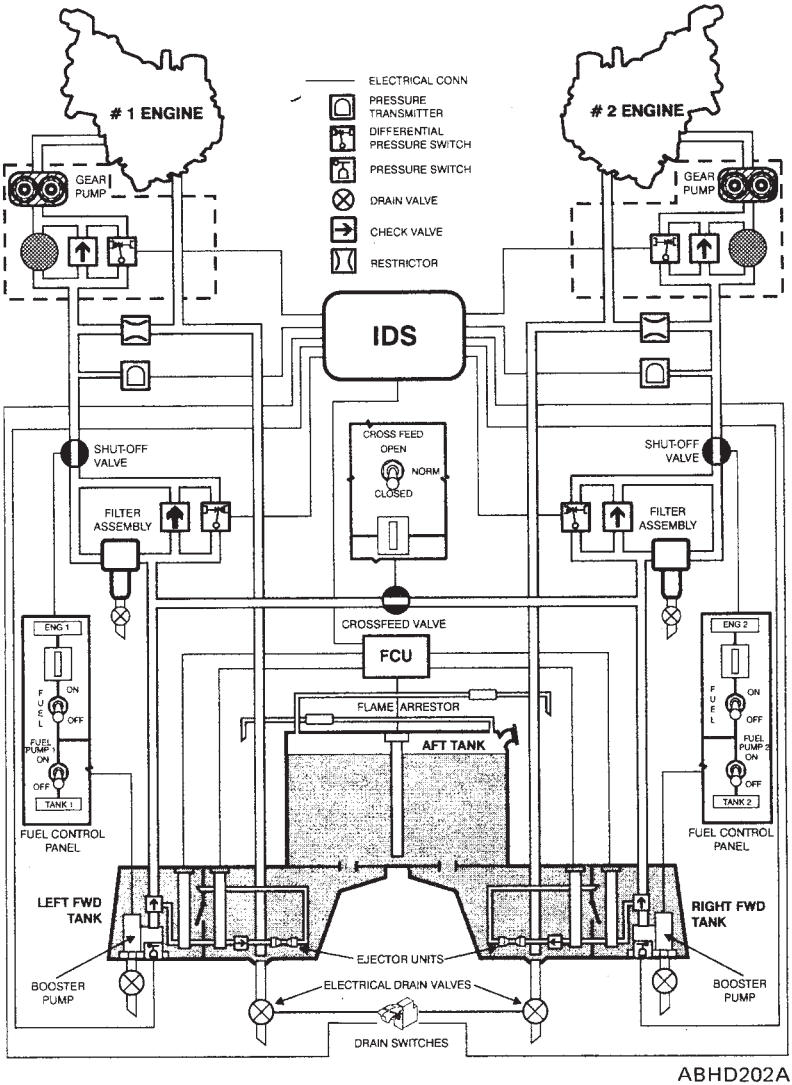

Figure 7-9. Airframe fuel system schematic

FOR TRAINING ONLY

FLIGHT CONTROL SYSTEMS

The flight control systems (figure 7-10) provide the the correct control responses when the pilot makes control selections, giving him positive control of the attitude, speed and altitude of the helicopter. The A109E incorporates conventional helicopter flight controls: collective, cyclic and antitorque operated by cockpit controls: collective pitch lever, cyclic stick and tail rotor pedals. A mixing unit in the collective/cyclic control systems integrates the control inputs from both systems and provides a common output to the collective/cyclic actuators.

Refer to figure 7-11 for the collective grip assembly and to figure 7-12 for cyclic grip assembly.

FOR TRAINING ONLY

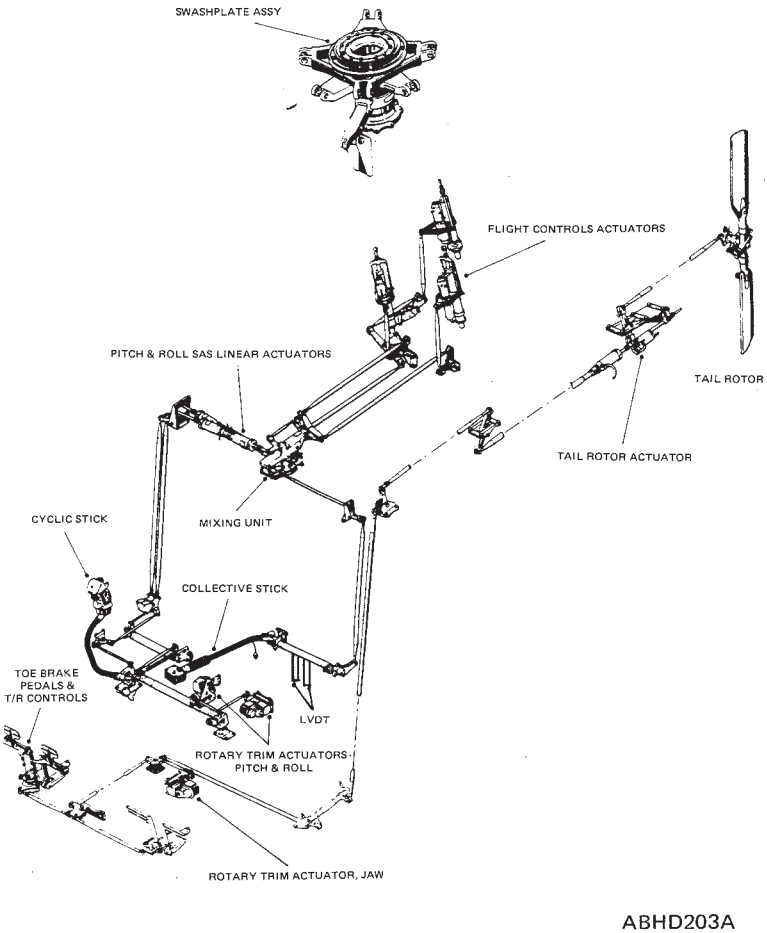

Figure 7-10. Flight control systems.

FOR TRAINING ONLY

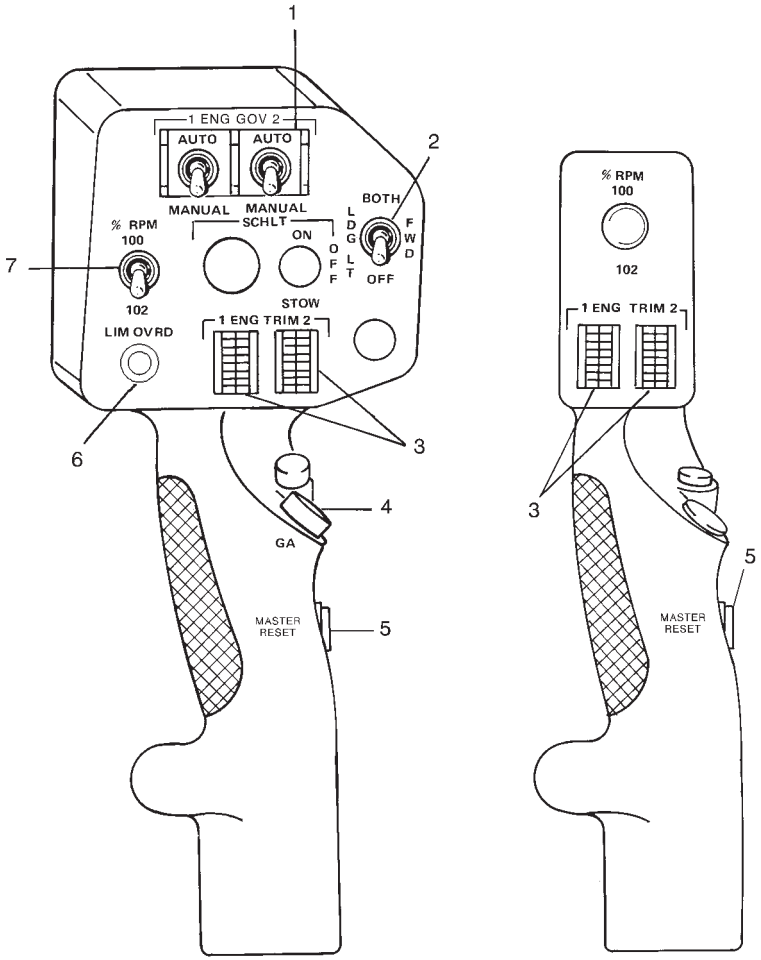

PILOT

COPILOT

ABHD007B

1. ENG 1, ENG 2 AUTO/MANUAL control switches
2. Landing light control switch
3. ENG 1, ENG 2 trim switch
4. Go around switch
5. Master caution/warning light reset pushbutton switch
6. LIM OVRD (limit override) switch pushbutton
7. RPM selector switch

Figure 7-11. Grip assembly, collective (typical).

FOR TRAINING ONLY

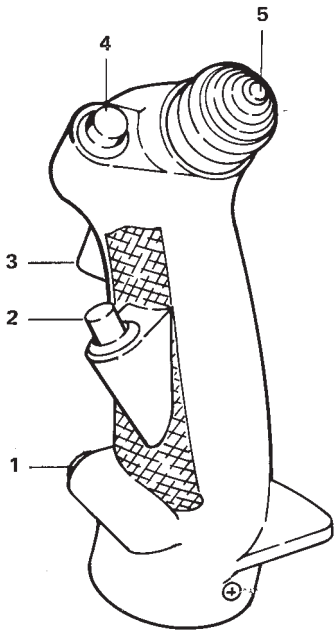

ABHDO88A

1. Cargo release pushbutton switch
2. Force trim pushbutton switch
3. Microphone/Intercommunication trigger switch
4. Flight Director remove/standby pushbutton switch
5. Beeper trim switch

Figure 7-12. Grip assembly, cyclic (typical).

FOR TRAINING ONLY

HYDRAULIC SYSTEM

Two independent systems (figure 7-13) supply the power to operate the flight control system and are used to provide the hydraulic power for operation of the main rotor servo actuators (both systems) and the tail rotor servo actuator (N.1 system only). In addition the N.2 system is used to provide the hydraulic power to the utility hydraulic system, necessary for operation of the landing gear and brakes.
The hydraulic power consists of the following sub-systems:
- N.1 hydraulic system
- N.2 hydraulic system
- Utility hydraulic system.

N.1 HYDRAULIC SYSTEM

This system, which operates at a maximum pressure of 1550 psi, consists of a suction circuit, a pressure circuit, a return circuit and a bypass circuit. The hydraulic fluid is contained in the reservoir located on the right side of the cabin roof. The fluid is sucked by a pump, driven by main transmission, and is supplied to the servo actuators through the filter group and the accumulator. The system is controlled by the hydraulic control panel, located on the front console, operated by the pilot. A ground test fitting is provided, pressure monitoring circuit and a low pressure monitoring circuit. The N.1 hydraulic system supplies the main rotor servo actuators and the tail rotor servo actuators.

N.2 HYDRAULIC SYSTEM

This system is similar to N.1 system. It supplies the main rotor servo actuators and the utility hydraulic system.

UTILITY HYDRAULIC SYSTEM

This system receives the power pressure from N.2 hydraulic system and supplies the pressure to operate the landing gear, wheel brakes, rotor brake and nose gear centering lock.
There are two sources of pressure energy supplied by this system:

FOR TRAINING ONLY

MAIN (NORMAL): to provide energy to operate landing gear actuators, landing gear uplocks, nose gear centering lock, wheel brakes (toe pedals) and wheel brakes (park selector).
EMERGENCY: to provide energy to operate landing gear uplocks (unlocks), landing gear actuators (lower and lock), wheel brakes (park selector operation) and nose gear centering lock.

FOR TRAINING ONLY

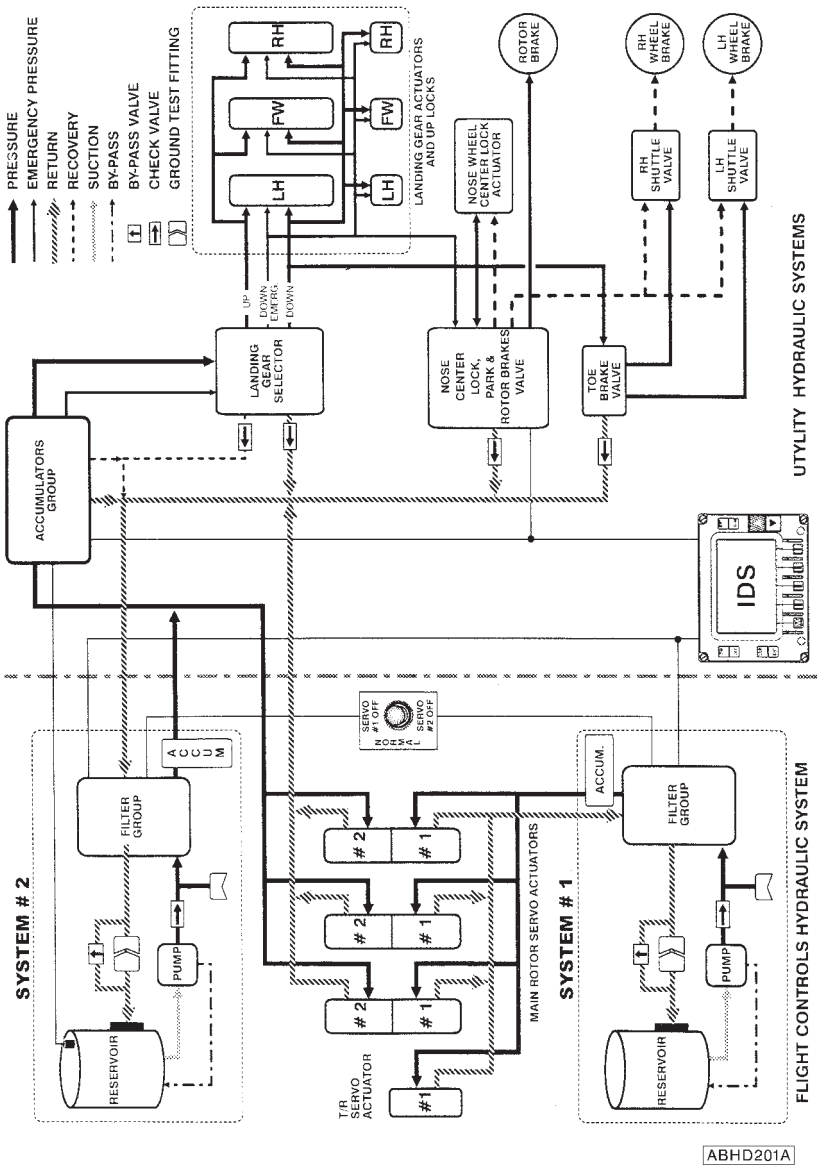

Figure 7-13. Hydraulic systems.

FOR TRAINING ONLY

ELECTRICAL SYSTEMS

The electrical and electronic systems (figure 7-14) are powered by single wire circuit with common ground return through the helicopter structure.
The helicopter power supplies are:
- 28 V dc
- 115 V ac 400 hz single phase
- 26 V ac 400 Hz single phase

Two generators, a battery and, for ground handling, an external power receptacle, are the dc power main sources.
Two static inverters, powered by dc voltage, are the ac sources.
Both dc and ac powers are distributed through a bus bar system and operated by control switches located on the overhead console.
The electrical system is interfaced with the IDS for voltage, current, advisory, caution and warning indications.

DC ELECTRICAL SYSTEM

The dc electrical system (figure 7-15) is a 28 V direct current single conductor system, using the helicopter structure as a negative ground.
The main components of the systems are:
- Two starter generators
- Two dc control boxes
- Battery
- An external power receptacle
- One dc relay box

ESSENTIAL ELECTRICAL DC EQUIPMENT (TYPICAL)

The following equipment are supplied by the essential busses

Essential bus #1
ECU #1, Fuel cross feed, Force trim, Fire extinguisher, Fire det., Fuel pump #1, Fuel valve #1, Fuel q.ty #1.

Essential bus #2
Hydraulic system, Fuel q.ty #2, Fuel valve #2, Fuel pump #2, Fire det., Fire extinguisher, Hoist pwr, Hoist cable cut, Eng. gov. CTL, EDU #2, DAU CH-B, ECU #2.

FOR TRAINING ONLY

Battery

The helicopter is equipped with a 24 V, 27 or 22 Ah or with a 25.2 V, 28 Ah nickel-cadmium battery located in the nose compartment.
A temperature switch, inside of the battery and connected to the IDS, detects the internal temperature of the battery, giving a BATT HOT warning message on the EDU 1 in case of battery overtemperature.

External power

The helicopter is provided with an external power receptacle on the rear right side of the fuselage. A microswitch, activated by the receptacle door, gives the EXT PWR ON advisory message on the EDU 1 when the door is in the open condition.

Starter-generator

Two starter-generators, installed each on the proper engine reduction gear-box, provide engine start when operated as an electric starter motor; after the engine start, the started generator, driven by the engine, reverts into a dc generator providing the necessary 28 V dc power.

AC ELECTRICAL POWER

The alternate power (figure 7-16) is supplied by two 250 VA single phase static inverters via two sensor relays. The inverters require 28 V dc power input suppied by:
- dc main bus N.1, through the INV 1 circuit breaker and INV 1 ON/OFF switch, and
- dc main bus N.2, through the INV 2 circuit braker and INV 2 ON/OFF switch.

The circuit breakers and control switches are located on the overhead console. Each inverter supplies 115 V ac and 26 V ac to its own 115 V ac and 26 V ac distribution busses to which the helicopter ac loads are connected. In the event of an inverter failure, the relative sensing relay deenergizes, connecting the failed inverter busses to the other operating inverter.

FOR TRAINING ONLY

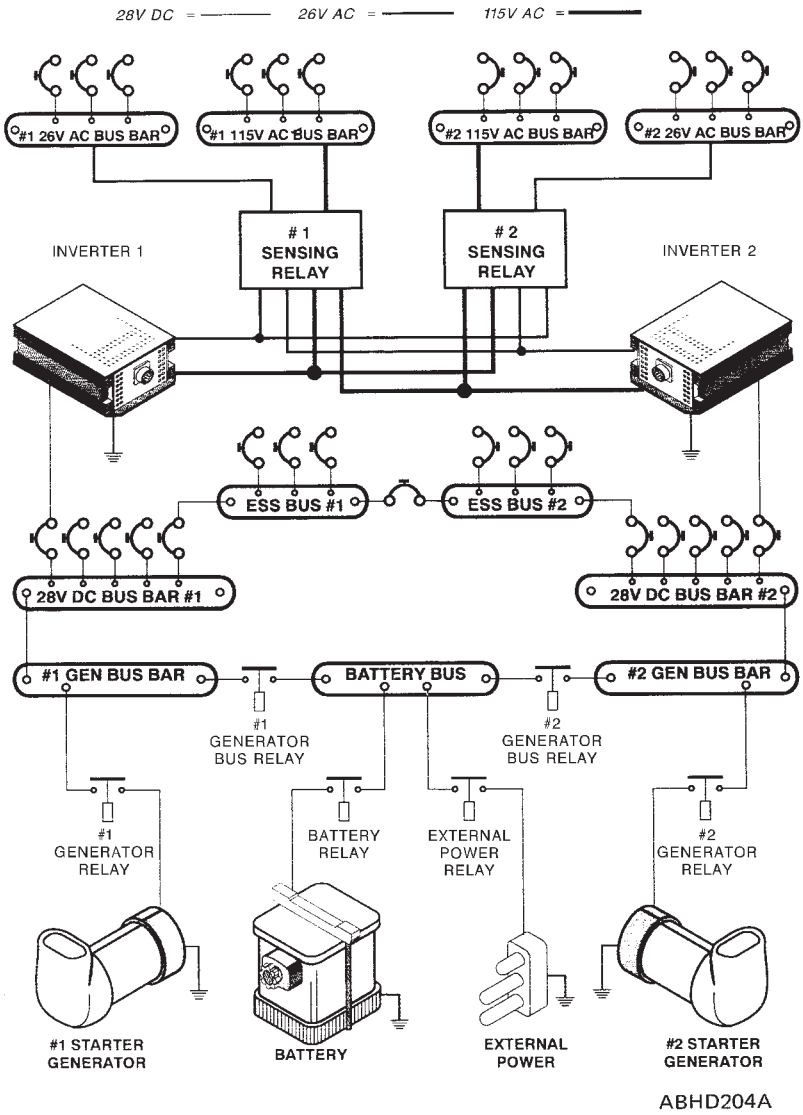

Figure 7-14. Electrical power systems.

FOR TRAINING ONLY

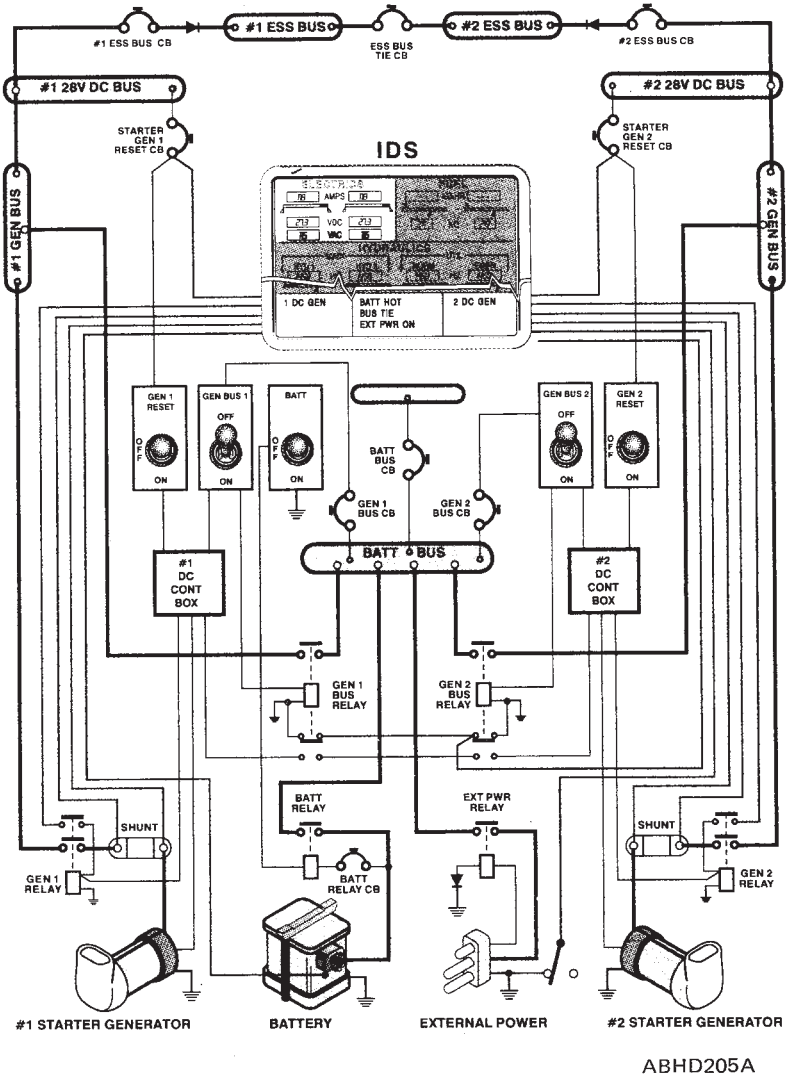

Figure 7-15. DC electrical system block diagram.

FOR TRAINING ONLY

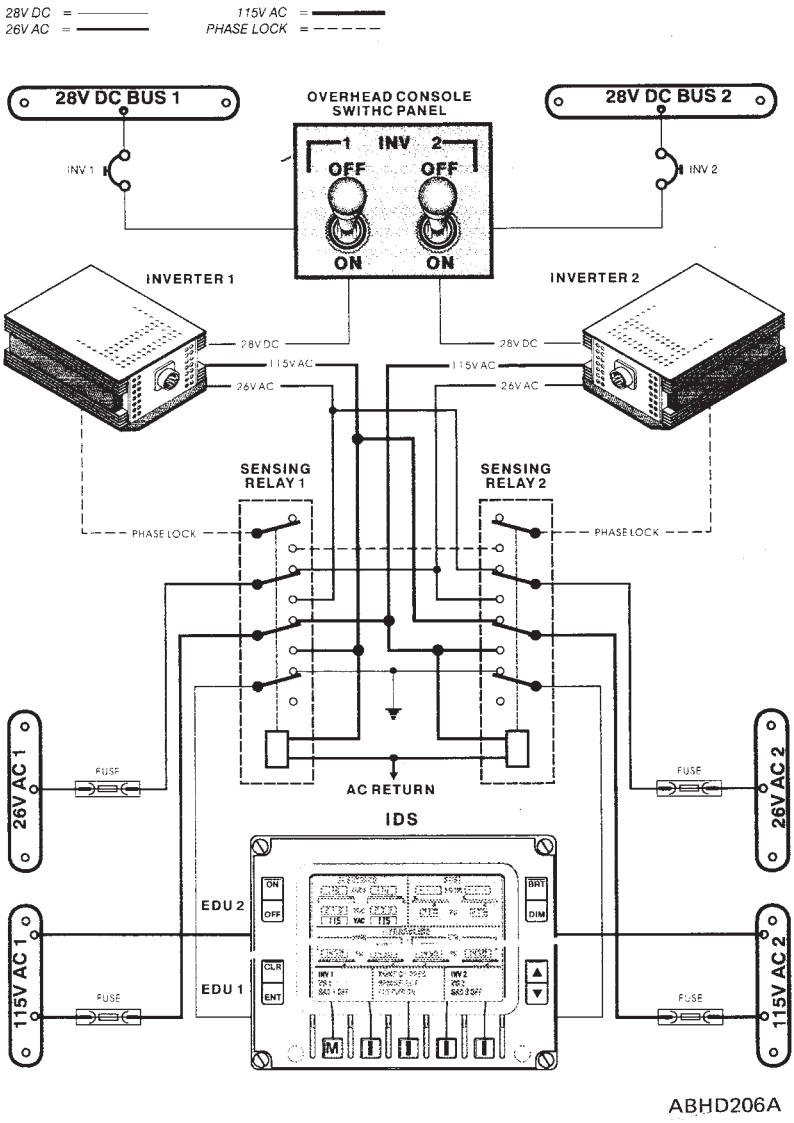

Figure 7-16. AC electrical system block diagram.

FOR TRAINING ONLY

HELIPILOT/FLIGHT DIRECTOR

OPERATING PROCEDURES

HELIPILOT IFR OPERATION

The Helipilot Computer will perform all electronic computation and processing necessary for stabilization and automatic flight path control of the helicopter when coupled with the Helcis Flight Director Computer.

The Helipilot System is operated from cockpit located switches.

Solenoid held switches allow engagement of the Helipilot System, SAS 1, and ATTD HOLD, and they also supply excitation voltages to the servo amplifiers.

SAS 1 supplies pitch, roll and yaw axes stabilizing signals through control actuators and SAS 2 contains redundant pitch and roll electronics and actuators.

IFR operation is with SAS 1 and SAS 2 and ATTD HOLD engaged. SAS 1 actuator activity can be monitored by the pilot observing actuator trim meters located on the instrument panel.

By pressing the monitor switch SAS 2 PUSH located below the trim meters, SAS 2 actuators activity can be monitored.

When the pilot desires to disengage SAS 1 or SAS 2 he may move the appropriate switch to OFF position.

The IFR Mode operates in either of two possible conditions: automatic path control or attitude hold.

The automatic path control is dependent on the Flight Director Computer and is automatically achieved upon selection of a valid flight director mode on the FD controller. If a valid flight director mode is not selected in either the pitch or roll axis, that axis reverts to attitude hold.

When flying in attitude hold, the pilot may command attitude changes in the normal manner through the cyclic control.

Permanent attitude changes are achieved by operation of the aircraft FTR button located on the cyclic grip.

When the Helipilot System is coupled to the FD Computer and a valid flight director mode is selected, the aircraft flight path is automatically maintained by series actuators; however, any long term trimming operations are accomplished by the pilot.

FOR TRAINING ONLY

The requirement to re-trim the controls is noted by the pilot by monitoring the actuator trim meters or will be noted by observing large deviations on the flight director indicator.
Retrimming is accomplished in the normal manner, i.e. by operating the trim release button on the cyclic and repositioning the cyclic as necessary.
Retrimming is necessary only in the yaw axis when Autotrim is engaged.
SFENA motorized trim provides both lateral and longitudinal cyclic trim through the activation of the AUTOTRIM switch and Flight Director modes during COUPLED operations.
AUTOTRIM is activated once the SAS actuator(s) are displaced from their midpoint by 30% of their travel.
If this or greater displacement is maintained for 2.5 seconds, the trim motor(s) are keyed and run until SAS actuator is recentered.
The autotrim function is cancelled by either the FTR button on the pilot's cyclic stick (or copilot's if installed) or when the Flight Director is in STANDBY (SBY) mode.
The coupled FD modes may be disengaged by pressing the FD-SBY button located on the cyclic, or moving the COUPLED/DECOUPLED switch to DECOUPLED position located on the console.
In this case the FD command bars are still present on ADI.
The attitude retention SAS 1, SAS 2 and ATTD HOLD shall be maintained throughout IFR Flight.

HELIPILOT VFR OPERATION

The engagement of SAS 1 and/or SAS 2, provides short term stabilizing signals to the helipilot actuators.
Normal operation is with SAS 1, SAS 2 and ATTD HOLD engaged and the pilot flies the helicopter in the normal manner.
The short term stabilization provided by the helipilots improves basic aircraft handling qualities and reduces the pilot work load.
To change from SAS only to the normal IFR Attitude Retention engage ATTD HOLD.
Flight with SAS only is reserved for VFR operation only.

FOR TRAINING ONLY

FLIGHT DIRECTOR COMPUTER

The Flight Director Computer will perform all electronic computation and processing necessary for displaying flight director commands on the attitude indicator and for automatic path control of the helicopter when coupled with the Helipilot Computer.

Lateral modes available for either flight director or automatic coupling include heading select, NAV/VOR-VOR APP and localizer (both normal and back course).

In each case the navigation errors are processed by the flight director computer, providing roll attitude command which results in interception and tracking of the desired lateral flight path.

The pilot selects a desired mode (HDG or VOR APP or BC).

The vertical command bar on the ADI is then automatically followed by the Helipilot Computer when coupled.

The pilot when the system is uncoupled, flies the command bars and cross checks raw data in order to keep the aircraft on course. Longitudinal/vertical modes of operation include barometric altitude hold (ALT), airspeed hold (IAS) vertical speed select (VS) and glideslope capture and track (GS).

A vertical path can be flown IAS or ALT or VS or G/S.

Airspeed errors will then be processed to provide pitch attitude commands (displayed on the horizontal command bar on the ADI), when the ALT mode will be engaged, and altitude errors provide pitch attitude command.

Similarly, vertical speed and glideslope may be flown via pitch.

In the airspeed mode, changes to the existing speed may be commanded by operation of BEEP TRIM switch.

Altitude changes are normally made by engaging VS, setting the desired climb or descent rate on the IVSI and re-engaging ALT when the desired altitude is reached.

Glideslope mode is armed by pushing the ILS button.

Glideslope Engagement is automatic at the proper capture point. In addition to the above modes, an additional feature is provided. For Flight Director approaches, either on glideslope or open loop via selected vertical speed, a command to level out is made automatically as radar altitude decreases to 50 feet (if radar altimeter is installed).

At this point, the pitch command cue is tripped from G/S or VS automatically to maintain constant radar altitude. This mode is intended only as a safety

FOR TRAINING ONLY

back-up in case the pilot has not taken over the aircraft manually at decision height or otherwise performed a go-around.
The go-around mode is engaged by the operation of the push-button located on the collective stick.
Engagement of this mode commands pitch attitude to achieve and maintain 750 FPM for helicopters with Flight Director wiring 109-0771-92-103 (1000 FPM for helicopters with Flight Director wiring 109-0771-92-107) climb if the airspeed is greater than 55 kias and the roll axis commands level attitude.
A pre-selected go-around heading may be engaged at any time by re-engaging the HDG mode, while the longitudinal/vertical axes remain in go-around.

IN FLIGHT OPERATION

Climb

Climb may be accomplished using either heading hold (HDG) or navigation (NAV-VOR APP) for roll control and either airspeed hold IAS or vertical speed hold (VS) for pitch control. The procedure for initiating a climb immediately following take off is:

SAS 1, SAS 2 and ATTD HOLD	: On before take off
Collective	: Climb power
FD	: Appropriate pitch and roll modes selected after translation.
TRIM	: As required.

Cruise

Level-off with the Helipilots engaged, or in Flight Director flight, may be made by selecting ″ALT″ at the desired altitude.
This reference altitude may be changed at any time by pressing off ALT and flying to a new altitude and re-selecting ″ALT″.
If cruising on ″IAS″ a new airspeed may be selected by activating the airspeed increase/decrease switch on the pilot’s collective, which alters the reference airspeed at approximately 2 knots per second.

FOR TRAINING ONLY

VOR

VOR interception and tracking

To intercept a preselected VOR course, the flight director features an automatic capture capability which is armed prior to approaching an on-course condition.

Automatic capture is armed by pushing the NAV button, which will cause both HDG and NAV Arm buttons to illuminate if the course deviation indicator (CDI) is deflected off course.

During this armed mode, the autopilot responds only to the heading ″bug″.

As the helicopter approaches a point of interception from the selected VOR course, the HDG light goes out and NAV CAP comes on, and the autopilot now responds to the NAV information. This mode is designed for cross country navigation and any radial capture should be effectuated more than 15 NM from the station and at proper altitude. For capture less than 15 NM use VOR APP mode. When approaching a VOR station, the radio beam width becomes too narrow for the helicopter to follow. Once the CDI moves off-scale rapidly, the over-station sensor is activated. Once activated, over station sensing will be maintained for a fixed period of time from the last major deflection of the CDI to allow for station passage (NAV: approx. 45 secs., VOR APP: approx. 5 secs.).

During this time the autopilot will respond to the ″course arrow″ in the same manner as it does to the ″heading bug″ when operating in the heading hold mode.

After the over-station sensor is deactivated the helicopter will turn to make a normal course interception in NAV mode and in VOR APP mode.

NOTE

Since over-station sensing is activated by rapid off scale movement of the CDI, a false over-station sensing can be induced by making rapid course changes with the course selector knob while tracking on VOR.

The helicopter is on the localizer when it approaches the glideslope. Glideslope capture is identified by the illumination of the ″ILS CAP″ button on the mode controller.

If the helicopter is not on the localizer when the helicopter intercepts the glideslope, automatic glideslope capture will not occur.

FOR TRAINING ONLY

Manual glideslope capture may be initiated by pressing the ILS button at the appropriate point.

BC (BACK COURSE) LOC

A loc back course approach is made by pressing the BC button located on the FD control panel. The CAPture will occur at two dots HSI deviation.
The HSI is operated per normal front course instrument procedures.

NOTE

The BC mode renders the Helcis G/S mode inoperative, G/S raw data may still be present on the ADI and HSI due to spurious front course signal reflections.
Do not attempt to utilize this information.

AUTO LEVEL (IF RADAR ALTIMETER IS INSTALLED)

As an additional feature, the flight director has programmed a minimum altitude feature which operates during approach and commands an automatic leveling of the helicopter with the pitch cue, if the flight director is still in use at 50 feet radar altimeter.
This 50 feet altitude will be maintained indefinitely unless the pilot returns the FD mode control to stand-by or go-around.
The autopilot should be disengaged and the flight director on stand-by once the helicopter reaches decision height (DH) and the airport in sight.
If the airport is not in sight at DH, a go-around may be commanded by activating the ″GO-AROUND″ button on the collective.

G/A - GO-AROUND

Go-Around, for helicopters with Flight Director wiring 109-0771-92-103, is programmed to command the following:

— ″Wings level″.
— Climb at 750 FPM.
— Necessary power to achieve the above parameters.

FOR TRAINING ONLY

Go-around, for helicopters with Flight Director wiring 109-0771-92-107, is programmed to command the following:

— ″Wing level″.

— Climb at 1000 FPM and approx. 80 Kts.

— Necessary power to achieve the above parameters.

Activation of the ″Go-around″ button will over-ride all other flight director modes and may be used at any time a climb is desired.

NOTE

Do not select IAS while in go-around, as the mode controller button will illuminate but will have no function.

NOTE

(for helicopters with Flight Director wiring 109-0771-92-107 only).
The suggested airspeed to perform the ″Go-around″ procedure is 100 to 140 Kts.
Airspeed lower than 100 Kts may determine a significant power demand to centre the collective cue. This power change will produce an helicopter pitch up variation to acquire the desired climb rate, that may reduce the initial speed to 50 Kts or below (depending on the helicopter maximum gross weight and on the rate of power change).
The helicopter will then accelerate to normal go-around speed ($\leqslant$ 80 Kts).
In order to minimize this airspeed reduction, it is suggested (below 100 Kts) a gradual application of the power required to centre the collective cue.

FOR TRAINING ONLY

INTEGRATED DISPLAY SYSTEM (IDS)

The IDS is composed of two identical Electronic Display Units (EDU) and a dual redundant Data Acquisition Unit (DAU). The DAU and EDUs communicate over ARINC 429 data busses.
The IDS performs the following functions:

DATA DISPLAY

The IDS displays Primary and Secondary aircraft data, as well as Warning, Caution and Advisory messages. In normal operating mode, EDU 1 displays Primary parameters (RPMs, TOT, Torque), and EDU 2 displays Secondary parameters (temperatures, pressures, electrical quantities, etc.). Various display modes are possible, depending on the aircraft status (i.e. in flight or on ground) and the System status (i.e. both EDUs operating or one EDU operating). Primary and Secondary data are described below.
Further definition of the Data Display function includes:

Display of Engine Control Unit (ECU) Primary Parameters

The IDS does the following:

— DAU and both EDUs receive primary engine parameters from both ECUs. Also receive additional parameters, such as discretes, status and fault words from both ECUs.

— The DAU repeats ECU data to the EDUs over the ARINC 429 data busses. Primary data includes N1, TOT, Torque and NR/N2.

Display of DAU Primary Parameters

When selected either automatically or manually, the DAU provides the Primary data to EDUs.

Display of Warning and Caution Messages

Under normal conditions, Warning and Caution messages are displayed on EDU 1. EDU 1 message display area is fixed; if message conditions exist

FOR TRAINING ONLY

which overrun the allowed display area, an indication of ″more pages″ is given by means of broken vertical lines and the pilot must use the up/down rocker switch on EDU bezel to scroll through messages.
At initial power-up, the Warning and Caution messages are displayed in a pre-defined priority, in order to provide a visual cue to the pilot during the engine start. At the end of pre-start check routine, the pilot may have to reestablish the priority order by pressing the CLR (Clear) switch on EDU bezel.
The IDS suppresses the active messages according to the following matrix:

Helicopter on ground	
Failure or Status Condition	**Message Suppressed**
Engine Out	PLA Caution
Engine Out and N 1 < 50%	ENG OUT Warning (enabled if ENG MODE switch not OFF and N 1 > 50%)
ECU in Manual Mode	PLA Caution
ECU Failure	PLA Caution
ENG MODE switch not OFF	ECU MAINT Caution

FOR TRAINING ONLY

Helicopter in flight	
Failure or Status Condition	**Message Suppressed**
Engine Out	PLA, DC GEN, OIL PRES Cautions
N 2 Sensor Failure (FAIL legend)	IDLE Legend
ECU in Manual Mode	PLA Caution
ECU Failure	PLA Caution

Display of Secondary Parameters

Secondary parameters are processed by the DAU and displayed on EDU 2 as follows:

Indication	MAIN page	AUX page
Engine Oil Temperature and Pressure	X	
Transmission Oil Temperature and Pressure	X	
Fuel Pressure	X	
Fuel Quantity	X	X
Main Hydraulic Oil Pressure	X	X
Utility Hydraulic Oil Pressure		X
Outside Air Temperature (OAT)	X	
Voltmeters and Ammeters		X

FOR TRAINING ONLY

Display of Advisory/Status Messages

Under normal operating conditions, Advisory and Status messages are displayed on EDU 2 in green and cyan, respectively. The pilot may have to use the up/down rocker switch on the EDU bezel to scroll through messages. Following is the list of Advisory (green) messages:

Advisory Message	Description
PITOT 1 (2) HEAT	Pitot 1 (2) heater on
ECS ON	Environmental Conditioning System on
VENT ON	Ventilation system on
LIMIT OVRD ON	LIM OVRD switch activated and ECU power limits (N1, TOT and Torque) overridden
FD DECPLED	Flight Director in decoupled mode
LANDING LT ON	Landing lights on
AUTOTRIM OFF	Autotrim off
FT OFF	Force trim off

Following is the list of Status (cyan) messages:

Status Message	Description
CHECK DATA	Some pressure sensors out-of-tolerance in DATA page. With both engines off, check for possible off-set errors on pressure indications on EDU 2. (See also the A109E Maintenance Manual).

The following green messages are displayed on EDU 1:

— START on N1 scale
— IGN on TOT scale
— IDLE on N2 scale

while the green XFEED message is displayed on EDU 2 between the Fuel Quantity readouts.

FOR TRAINING ONLY

Color Coding

Under normal operating conditions, the scale pointers are presented in white and the associated digital boxes are presented in green. When any parameter exceeds the normal range of operation (green band), the color of associated pointer and digital box turns to yellow or red, as applicable, in order to highlight that particular condition. Furthermore, if that parameter enters in the red band, this latter turns to full red area to enhance the emergency condition. During engine start in manual mode, the digital boxes and pointers of N 1, TOT and Torque parameters turn to magenta until N 1 > 50% or the Engine Out discrete becomes inactive.

Display of IDS Malfunctions

In case of an internal IDS failure, the IDS Caution message is displayed on EDU 1. If either EDU fails, the healthy EDU automatically displays the REVERSIONARY mode. The REVERSIONARY mode can also be commanded via the ON/OFF switch on the EDU bezel. In case of complete loss of DAU, both EDUs display the CRUISE mode, as Secondary data are no longer available.

Display of Sensors Malfunctions

In case of loss of any analog input signal, red dashes in a white box are displayed on the affected EDU. In case of loss on any N 2 input signal, a red ″FAIL″ legend is vertically displayed adjacent to the affected N 2 scale.

Selection of Data Source

The DAU and the two ECUs interface with various analog and discrete sensors. The ECU data, when″healthy″, is always the source of Primary data for display by the IDS system. When an ECU informs the IDS that one or more pieces of its data are not valid, the IDS automatically reverts to the DAU as the source for the Primary data. However, the DAU can also be forced to be the source of Primary data for display via EDU bezel keys.

FOR TRAINING ONLY

Selection of Data Display Formats

The EDUs determine, based on the data they receive, the format that the data is displayed in. Display formats which can be manually selectable are accessible via the ″M″ (Menu) key on EDU bezel. Display formats include:

— **EDU 1**

START Mode. This mode can be selected via the START key in MENU page 1 of EDU 1 when the helicopter is on ground.

CRUISE Mode. This mode is automatically presented at initial power up or when selected via the CRUISE key in MENU page 1 of EDU 1. This display format is also automatically presented on both EDUs in case of complete loss of DAU, as Secondary data are no longer available.

One Engine Inoperative (OEI) Mode. This mode is automatically presented when an Engine Out condition exists or when the ENG MODE switch is set to IDLE or OFF. An OEI legend is vertically displayed adjacent to N 1, TOT and Torque scales and color coded as follows:

- **White**: Indicates that the OEI format is being used.
- **Yellow**: Indicates that the 2.5 minute power rating is authorized by the ECU.
- **Red flashing**: Indicates that the 2.5 minute power rating is expired, as commanded by the ECU.

If an in-flight engine re-start is performed, the red dot indicating the engine temperature start limit is only presented on the side of TOT scale related to the engine being started. The display format automatically reverts to the AEO limits if the start has been successful.

AUTOROTATION Mode. This mode is automatically presented when both Engine Out signals are active, both ENG MODE switches are set to IDLE or OFF, an RPM split condition exists or both Torque signals are < 2%.

FOR TRAINING ONLY

The IDS activates the corresponding AWG vocal messages based on the following power-off limits:

Rotor High when NR > 110%
Rotor Low when NR < 90%

REVERSIONARY Mode.This mode is automatically presented in case of either EDU failure or when manually commanded via the ON/OFF switch on EDU bezel.

The following display formats are also available:

REVERSIONARY - AEO
REVERSIONARY - OEI
REVERSIONARY - AUTOROTATION

As Secondary parameters are presented only in digital format without the box, a yellow or red dot (virtual light) is displayed adjacent to the affected title to indicate the operational band in which the relevant parameter is.

The warning, caution and advisory messages are displayed in priority order at the bottom of EDU 1 screen. If ″more pages″ of messages exist, the pilot must use the up/down rocker switch to scroll through them.

— **EDU 2**

MAIN Mode. This mode is automatically presented at initial power-up or when selected via the MAIN key in MENU page 1 of EDU 2.

Auxiliary (AUX) Mode. This mode is presented when selected via the AUX key in MENU page 1 of EDU 2. If a specific Warning or Caution message is set, the display automatically reverts to the MAIN page.

REVERSIONARY Mode. Same as in EDU 1.

Other Display Formats/Functions Selectable (EDU 1 and EDU 2)

TEST Mode (MENU page 1). Pre-flight test mode used to initiate the BIT function. This mode can only be accessed when the helicopter is on ground.

DATA Mode (MENU page 2). The IDS can, upon command via the CAL key in DATA page, calibrate all the pressure analog signal inputs, accounting for offsets in the sensors outputs with zero pressure applied. This format can only be accessed when the helicopter is on ground and

FOR TRAINING ONLY

is to be used at first DAU installation or when any pressure sensor is replaced.

DAU CH-A Selection (MENU page 2). This key is used to manually select the DAU Channel A as primary source for display. At initial power-up, the legend CH-A is displayed in green to indicate that this is the active channel. Once selected, a white box surrounds the green legend. The channel failure is indicated in yellow.

DAU CH-B Selection (MENU page 2). This key is used to manually select the DAU Channel B as primary source for display. At initial power-up, the legend CH-B is displayed in white to indicate that this is the hot-standby channel. Once selected, a white box surrounds the green legend. The channel failure is indicated in yellow.

MAIN TEST Mode (MENU page 3). Maintenance test mode used to verify the EDU screen integrity, as well as to present the system diagnostics. This mode can only be accessed when the helicopter is on ground.

DISPLAY DIMMING

The IDS does the following:

— Adjust EDU backlighting automatically based on input from Ambient Light Sensor (ALS) located on EDU bezel.

— Adjust EDU backlighting modifying ALS control based on manual input from the BRT/DIM (Bright/Dim) rocker switch located on EDU bezel.

— Adjust EDU backlighting based on status of Day/Night discrete input.

— Adjust intensity of Master Warning amd Master Caution Lights, if they are on, based on status of Day/Night discrete input.

COMPARISION MONITORING OF DAU DATA

The IDS displays ″DAU MISCMP-P″ (DAU Miscompare - Primary data)

FOR TRAINING ONLY

if primary data from each DAU channel disagree with one another.

MASTER WARNING AND MASTER CAUTION LIGHTS INTERFACE

One MWL and one MCL are installed at each pilot's station. The IDS does the following:

— Activate the MWLs when a Warning condition occurs. MWLs remain activated until the condition no longer exists, the Warning reset switch or the collective mounted reset switch is momentarily pressed.

— Activates the MCLs when a Caution condition occurs. MCLs remain activated until the condition no longer exists, the Caution reset switch or the collective mounted reset switch is momentarily pressed.

AURAL WARNING GENERATOR (AWG) INTERFACE.

The AWG sets a tone or vocal message in the pilots headsets when aircraft conditions warrant. The IDS is not the only system which interfaces with the AWG. The IDS does the following:

— Activates the AWG under Rotor High, Rotor Low, Transmission Overtorque or other warning conditions. AWG activation remains until the condition no longer exists, the Warning reset switch, the Caution reset switch or the collective mounted reset switch is momentarily pressed, as applicable.

— Activates the Rotor Low horn to provide a separate tone under low rotor speed conditions.

FUEL SYSTEM INTERFACE.

The IDS does the following:

— Provide excitation for each fuel pressure sensor and monitor its output signal.

FOR TRAINING ONLY

— Monitor the ″Fuel Low″ discrete input for each tank and display the corresponding Caution message, if set.

— Test the low level sensor for correct operation when commanded through the IDS TEST key and display the ″F LOW FAIL″ Caution message, if set.

— Monitor each fuel quantity signal provided by the Fuel Computer Unit (FCU).

— Test FCU for correct operation when commanded via the IDS TEST key.

ENGINE FIRE DETECTOR INTERFACE.

The IDS does the following:

— Monitor the ″Engine Fire″ discrete input for each engine and display the corresponding Warning message, if set.

— Monitor the ″Engine Fire Detector″ discete input from each engine and display the ″FIRE DET″ Caution message, if set.

— Test the ″Engine Fire Detector″ for correct operation when commanded via the IDS TEST key.

WEIGHT ON WHEELS (WOW) INTERFACE.

The IDS interfaces with WOW discrete input to determine that the aircraft is on the ground.

ENGINE BLEED AIR VALVE CONTROL.

The IDS interfaces with each engine Bleed Valve and does the following:

— Activate the relay driver which closes the corresponding Bleed Valve under Engine Out Condition or both Bleed Valves under Engine Fire condition, until the condition no longer exists.

— Deactivate the relay driver (Valve open) under all other conditions.

FOR TRAINING ONLY

BUILT-IN TEST (BIT)

Both the EDUs and the DAU are able to conduct self-tests and fault isolation. Testing is performed at power-up, as well as continuously during operation. Self-test of IDS can also be commanded via EDU TEST key. The following messages are displayed on EDU 2 if the pilot initiated test fails:

EDU 1 SW FAIL:	Red message flashing to indicate that the EDU 1 BIT checksum failure is detected.
EDU 2 SW FAIL:	Red message flashing to indicate that the EDU 2 BIT checksum failure is detected.
DAU-A SW FAIL:	Red message flashing to indicate that the DAU CH-A BIT checksum failure is detected.
DAU-B SW FAIL:	Red message flashing to indicate that the DAU CH-B BIT checksum failure is detected.
EDU 1 BIT BUSY:	Yellow message flashing to indicate that the EDU 1 has not yet passed the first pass through BIT.
EDU 2 BIT BUSY:	Yellow message flashing to indicate that the EDU 2 has not yet passed the first pass through BIT.
DAU-A BIT BUSY:	Yellow message flashing to indicate that the DAU CH-A has not yet passed the first pass through BIT.
DAU-B BIT BUSY:	Yellow message flashing to indicate that the DAU CH-B has not yet passed the first pass through BIT.
EDU 1 BIT FAIL:	Red message flashing to indicate that at least one BIT routine has failed.
EDU 2 BIT FAIL:	Red message flashing to indicate that at least one BIT routine has failed.
DAU-A BIT FAIL:	Red message flashing to indicate that at least one BIT routine has failed.

FOR TRAINING ONLY

EDU 1 SW FAIL: Red message flashing to indicate that the EDU 1 BIT checksum failure is detected.

DAU-B BIT FAIL: Red message flashing to indicate that at least one BIT routine has failed.

IFR INSTALLATION

The IFR installation is offered in a single pilot P/N 109-0810-22-139/-143 and in a dual control P/N 109-0810-22-141/-145 configuration (see Table 7-1).

FOR TRAINING ONLY

Part Number	Denomination
DUAL CONTROL CONFIGURATION	
109-0771-89-137/141	ICS
109-0771-89-117	ADF-60A
109-0771-89-109	VOR/ILS VIR 32 N°1
109-0771-89-113	VOR/ILS VIR 32 N°2.
109-0771-89-101	VHF/AM VHF 22A N°1
109-0771-89-105	VHF/AM VHF 22A N°2
109-0771-89-159	PILOT INSTRUMENTS (NAV.) (with EHSI)
109-0771-89-165	PILOT INSTRUMENTS (NAV.) (with EFIS)
109-0771-91-105	SPERRY AFCS
109-0771-89-125/225	TRANSPONDER TDR 90 / TDR94 Mod. S
109-0771-89-121	DME 42
109-0810-01-117	DUAL CONTROLS
109-0771-89-163	COPILOT INSTRUMENTS (NAV.) (with EHSI)
109-0771-89-167	COPILOT INSTRUMENTS (NAV.) (with EFIS)
109-0771-89-129	GYROCOMPASS INSTALLATION
109-0771-89-151	VERTICAL GYRO 1
109-0771-89-155	VERTICAL GYRO 2
SINGLE PILOT CONFIGURATION	
109-0771-89-137	ICS
109-0771-89-117	ADF-60A
109-0771-89-109	VOR/ILS VIR 32 N°1
109-0771-89-113	VOR/ILS VIR 32 N°2.
109-0771-89-101	VHF/AM VHF 22A N°1
109-0771-89-105	VHF/AM VHF 22A N°2
109-0771-89-159	PILOT INSTRUMENTS (NAV.) (with EHSI)
109-0771-89-165	PILOT INSTRUMENTS (NAV.) (with EFIS)
109-0731-89-107	ADDITIONAL INSTRUMENTS (with EFIS)
109-0731-96-107	ADDITIONAL INSTRUMENTS (with EHSI)
109-0771-91-105	SPERRY AFCS
109-0771-89-125/225	TRANSPONDER TDR 90 / TDR94 Mod. S
109-0771-89-121	DME 42
109-0771-89-129	GYROCOMPASS INSTALLATION
109-0771-89-151	VERTICAL GYRO 1
109-0771-89-155	VERTICAL GYRO 2

Table 7-1 (sheet 1 of 2). IFR installation components ″COLLINS configuration″.

FOR TRAINING ONLY

Part Number	Denomination
DUAL CONTROL CONFIGURATION	
109-0771-88-137/133	ICS
109-0771-88-117	ADF KR87
109-0771-88-121	MARKER BEACON
109-0731-96-109	FLIGHT INSTRUMENTS (COPILOT) (with EHSI)
109-0731-89-109	FLIGHT INSTRUMENTS (COPILOT) (with EFIS)
109-0771-88-101	NAV/COMM 1 KX165
109-0771-88-105	NAV/COMM 2 KX165
109-0771-88-157	PILOT INSTRUMENTS (NAV.) (with EHSI)
109-0771-88-163	PILOT INSTRUMENTS (NAV.) (with EFIS)
109-0771-91-105	SPERRY AFCS
109-0771-88-113/203	TRANSPONDER KT71 / KT70 Mod. S
109-0771-88-109	DME KDM706A
109-0810-01-117	DUAL CONTROLS
109-0771-88-161	COPILOT INSTRUMENTS (NAV.) (with EHSI)
109-0771-88-165	COPILOT INSTRUMENTS (NAV.) (with EFIS)
109-0771-88-125	GYROCOMPASS INSTALLATION
109-0771-88-149	VERTICAL GYRO 1
109-0771-88-153	VERTICAL GYRO 2
SINGLE PILOT CONFIGURATION	
109-0771-88-133	ICS
109-0771-88-117	ADF KR87
109-0771-88-121	MARKER BEACON
109-0731-96-107	ADDITIONAL INSTRUMENTS (with EHSI)
109-0731-89-107	ADDITIONAL INSTRUMENTS (with EFIS)
109-0771-88-101	NAV/COMM 1 KX165
109-0771-88-105	NAV/COMM 2 KX165
109-0771-88-157	PILOT INSTRUMENTS (NAV.) (with EHSI)
109-0771-88-163	PILOT INSTRUMENTS (NAV.) (with EFIS)
109-0771-91-105	SPERRY AFCS
109-0771-88-113/203	TRANSPONDER KT71 / KT70 Mod. S
109-0771-88-109	DME KDM706A
109-0771-88-125	GYROCOMPASS INSTALLATION
109-0771-88-149	VERTICAL GYRO 1
109-0771-88-153	VERTICAL GYRO 2

Table 7-1 (sheet 2 of 2). IFR installation components ″KING configuration″.

FOR TRAINING ONLY

LIGHTING SYSTEMS

The lighting system include all the lights utilized for the helicopter interior and exterior illumination.
The exterior lights include three position lights, two anti-collision lights and two landing lights.
The interior lights include instrument lights, utility lights, baggage light, cabin lights and advisory lights.

EMERGENCY EQUIPMENT

PORTABLE FIRE EXTINGUISHER

The helicopter is equipped with a portable, manually operated fire extinguisher installed on the central console, between the pilot's and copilot's seats. The mounting bracket is of the quick release type, for rapid removal of the fire extinguisher.

FIRST AID KIT

The first aid kit consists of a medical bag secured with strips of velcro to the vertical panel below the rear passenger seat.

COCKPIT VOICE DATA RECORDER

The Cockpit Voice Data Recorder (CVDR) System model FA23XX MADRAS consists of:

— a Recorder Unit;

— a Control Unit;

— an Area Microphone;

— a Mounting Tray.

The CVDR is housed in ARINC 404A, 1/2-ATR short case (refer to Figure 7-17).

FOR TRAINING ONLY

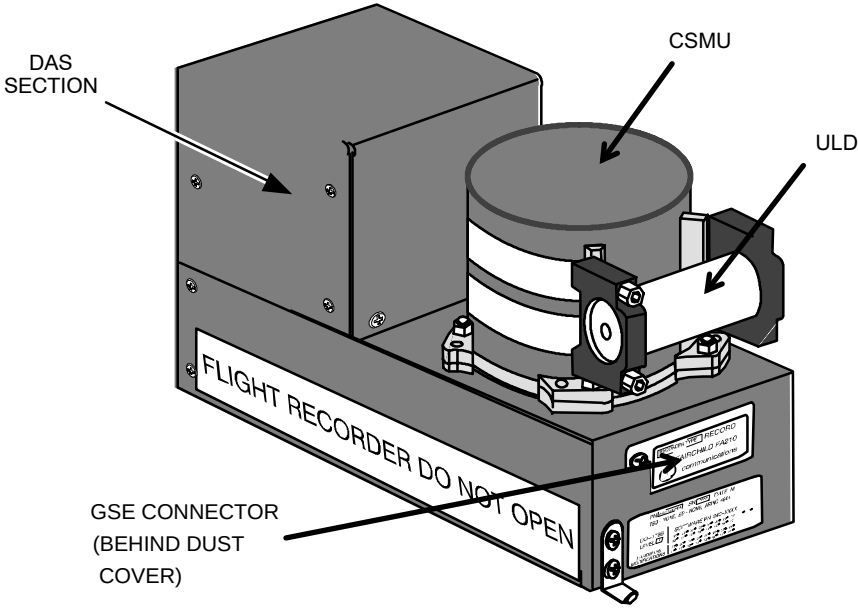

Figure 7-17. Cockpit Voice Data Recorder Model FA23XX MADRAS.

The chassis and Crash Survivable Memory Unit (CSMU) are painted international orange. Two reflective stripes are located on the CSMU.

The CSMU contains the solid state flash memory used as the recording medium. The micro Data Acquisition Section (DAS) input is self-contained in the rear chassis assembly.

An Underwater Locator Device (ULD) is mounted horizontally on the front of the CSMU and is also used as the recorder's carrying handle.

The Ground Support Equipment (GSE) connector is located on the front of the MADRAS. This connector provides the interface from the recorder to GSE for checkout of the recorder, or to transfer data to a readout devices.

The CVDR is a ″On Condition Line Replaceble Unit″ (LRU) that simultaneously records both cockpit voice and flight data.

FOR TRAINING ONLY

The CVDR-MADRAS records a minimum of 120 minutes of high quality audio from the following four cockpit audio inputs:

Channel 1: Pilot's Audio
Channel 2: Co-pilot's Audio
Channel 3: Operator's Audio
Channel 4: Cockpit Area Microphone (CAM) Audio

The Flight Data Recorder (FDR) function receives flight data at 256 words-per-second (wps). The flight data is stored in flash memory segregated from the cockpit voice data. The CVDR is capable of storing a minimum of 25 hours of flight data. Flight data stored in 25-hour configuration CVDRs can be downloaded in approximately five minutes.

Previously recorded voice information cannot be read from the CVDR while it is installed in the aircraft. However, the flight data may be monitored real time, or copied out to the Ground Station Equipment.

Operator's interface with CVDR unit is obtained by means of a control panel located in cockpit roof, in the vicinity of overhead panel. The control panel is shown in Figure 7-18.

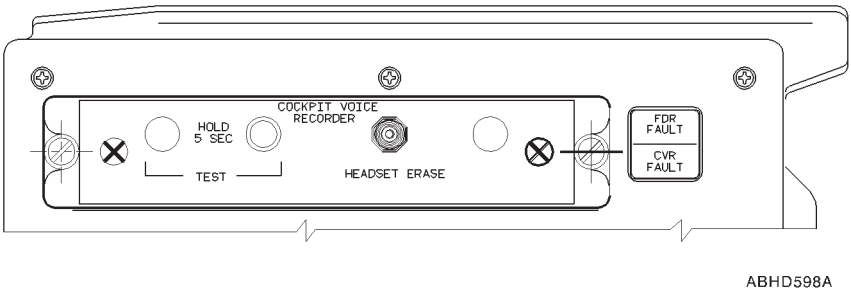

Figure 7-18. Cockpit Voice Data Recorder Control Panel.

FOR TRAINING ONLY

The following information and data are provided to CVDR unit:

— A collection of Engines' and Helicopter's parameters, WARNING/CAUTION/ADVISORY messages by mean of serial connection between the Data Acquisition Unit (DAU) of the Integrated Display System (IDS) and the CVDR unit;

— Flight controls position by means of synchro-transmitters located on flight controls rods underneath pilot's seats;

— Helicopter's center of gravity accelerations by means of accelerometer located in the rear avionic bay;

— Airspeed and altitude by means of serial connection between the Air Data Unit (ADU) and the CVDR;

— Pilot/co-pilot's and operator's ICS communications, cockpit and passengers cabins audio signals by means of an area microphone located in the cockpit's front window central post (left side).

FOR TRAINING ONLY